Side View

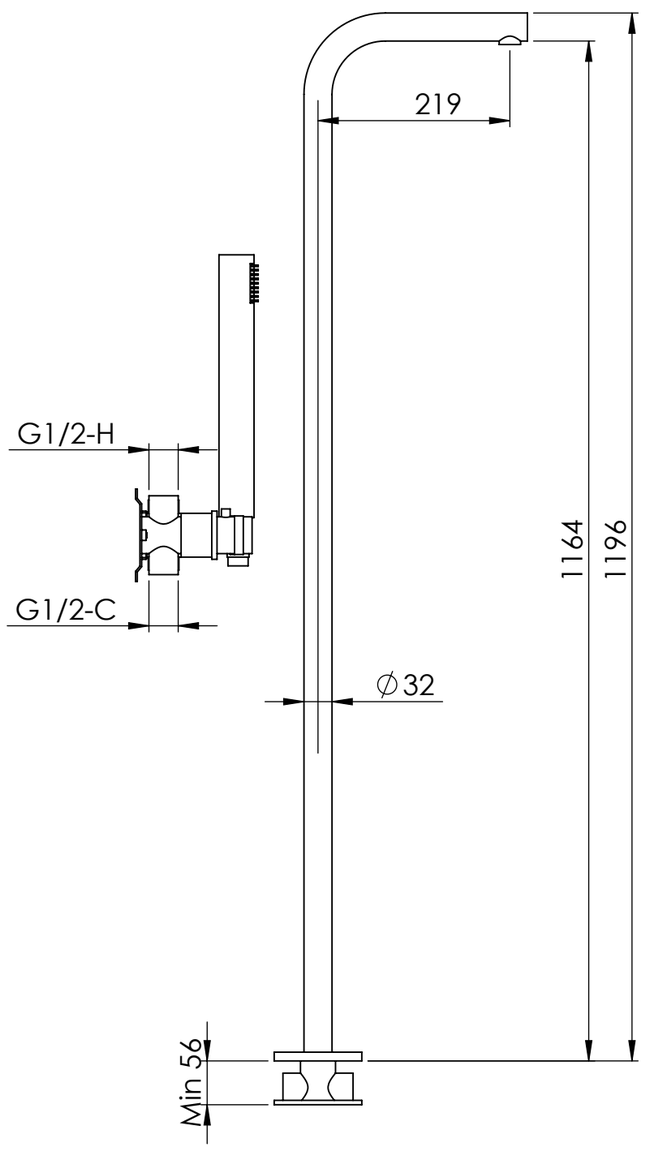

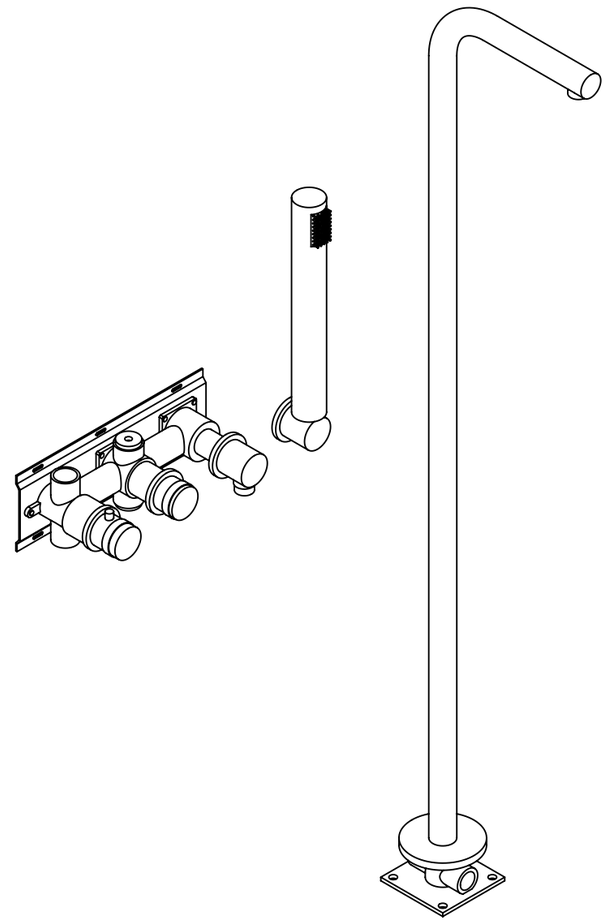

Back View

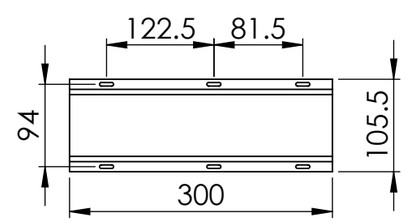

Bottom View

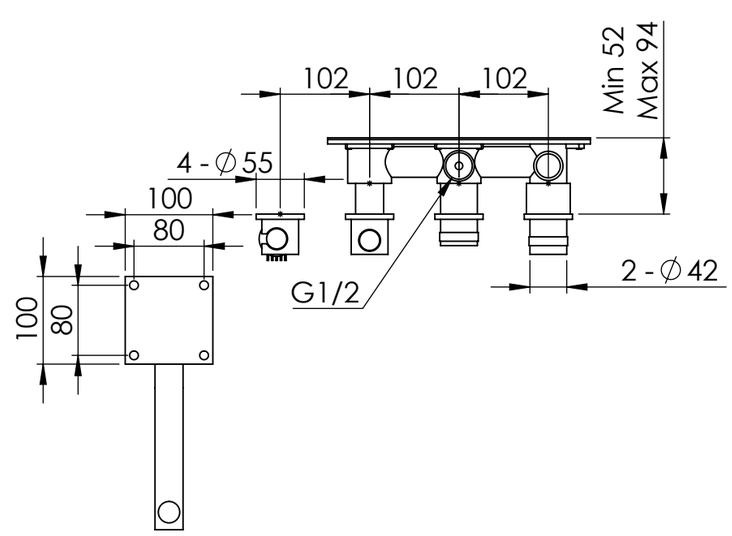

LUSSO	Product Name	Urban Series
	Product Type	Freestanding Bath Tap with WM Shower Mixer

All dimensions provided in millimeters.