Front View

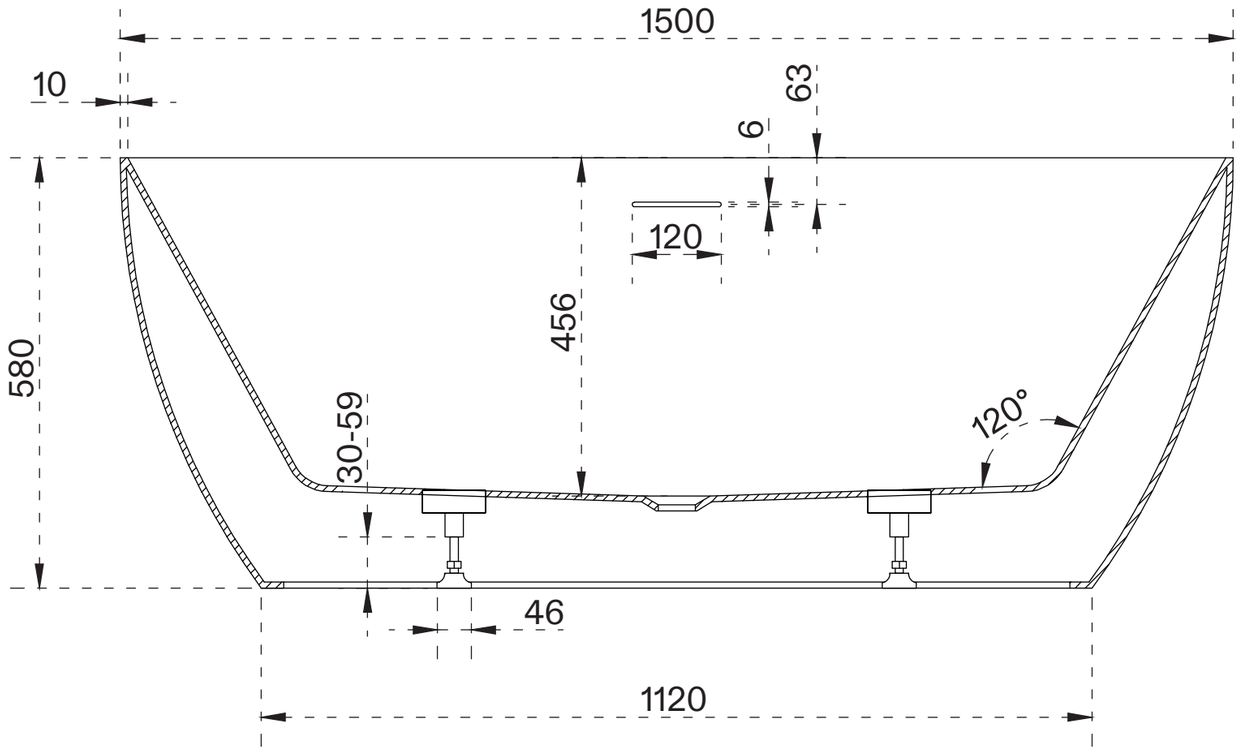

Side View

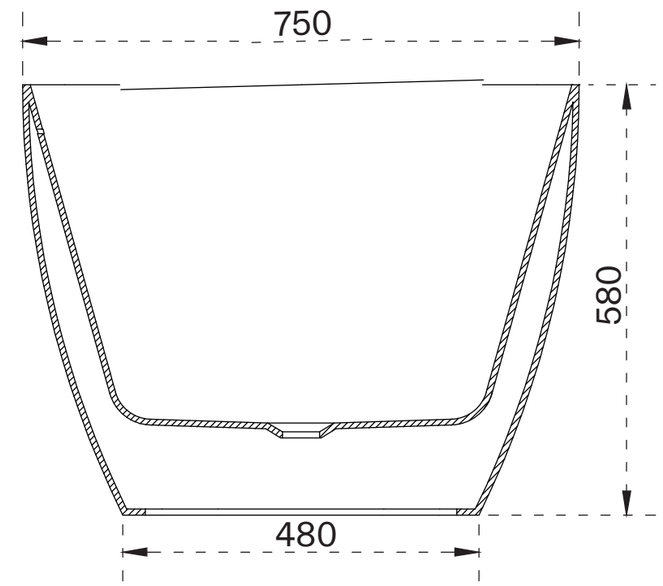

Top View

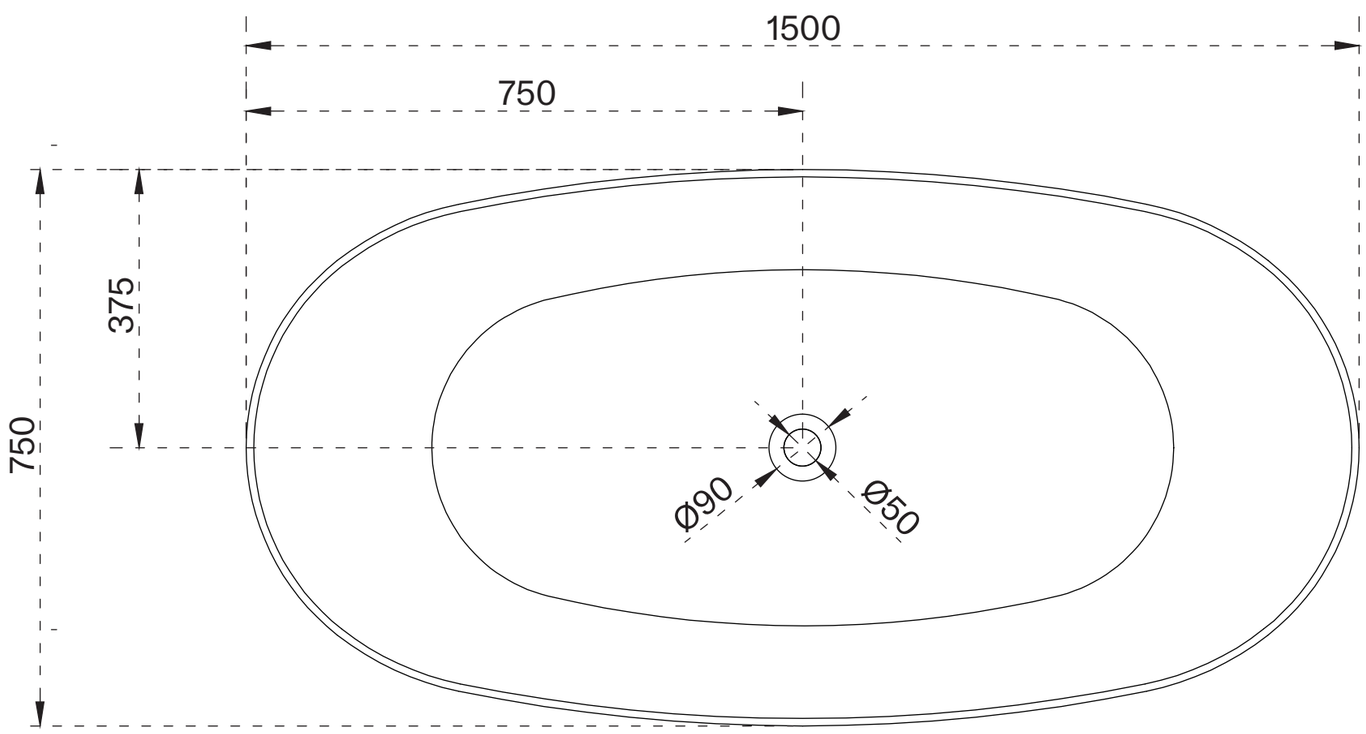

LUSSO	Product Name	Lusso Light Mimi Freestanding Bath 1500mm
	Basin Finish:	Acrylic
	Size, mm:	1500 × 750 × 580

All dimensions provided in millimeters.