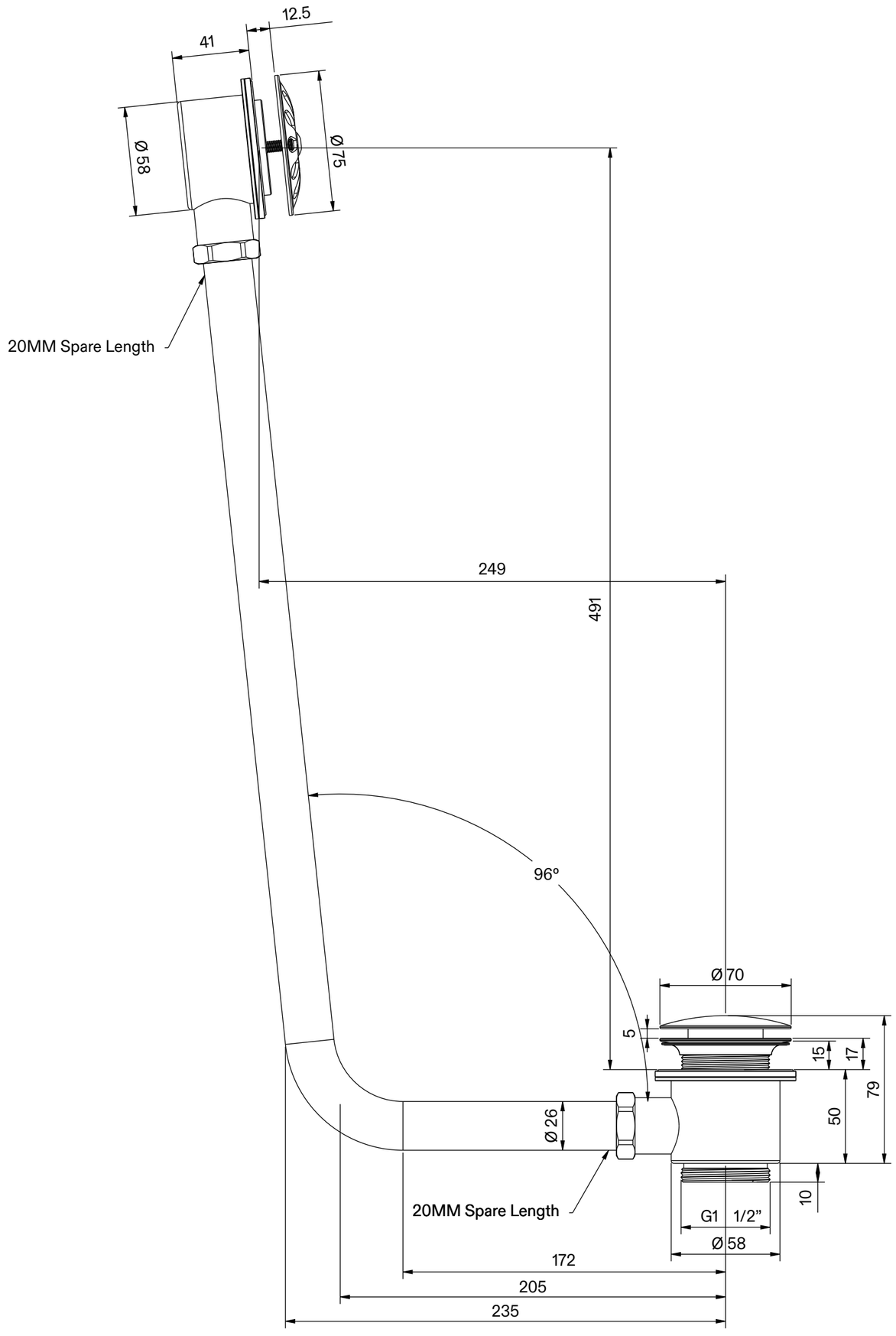

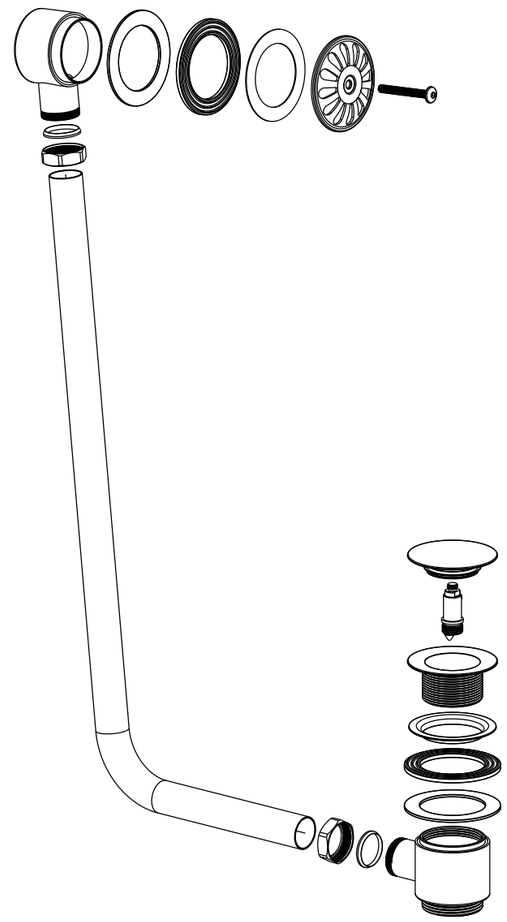

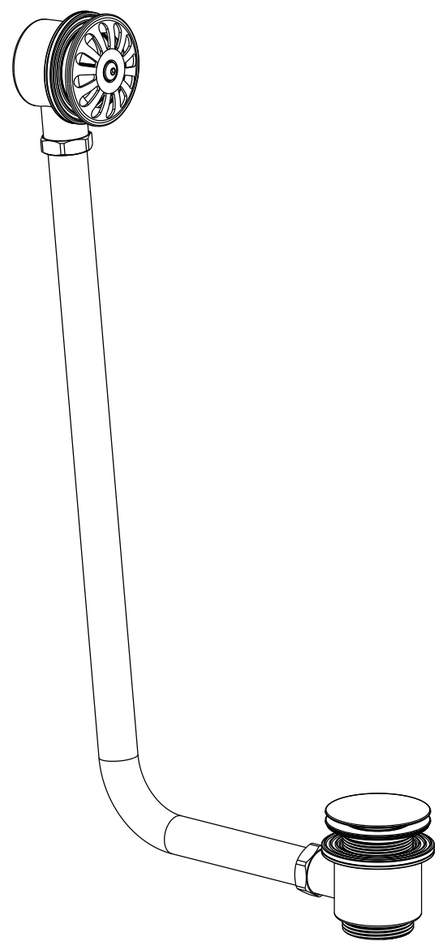

LUSSO	Product Name	Deco Low Profile Exposed Overflow Bath Waste Kit
	Size	275 × 80 × 580

All dimensions provided in millimeters.