Front View

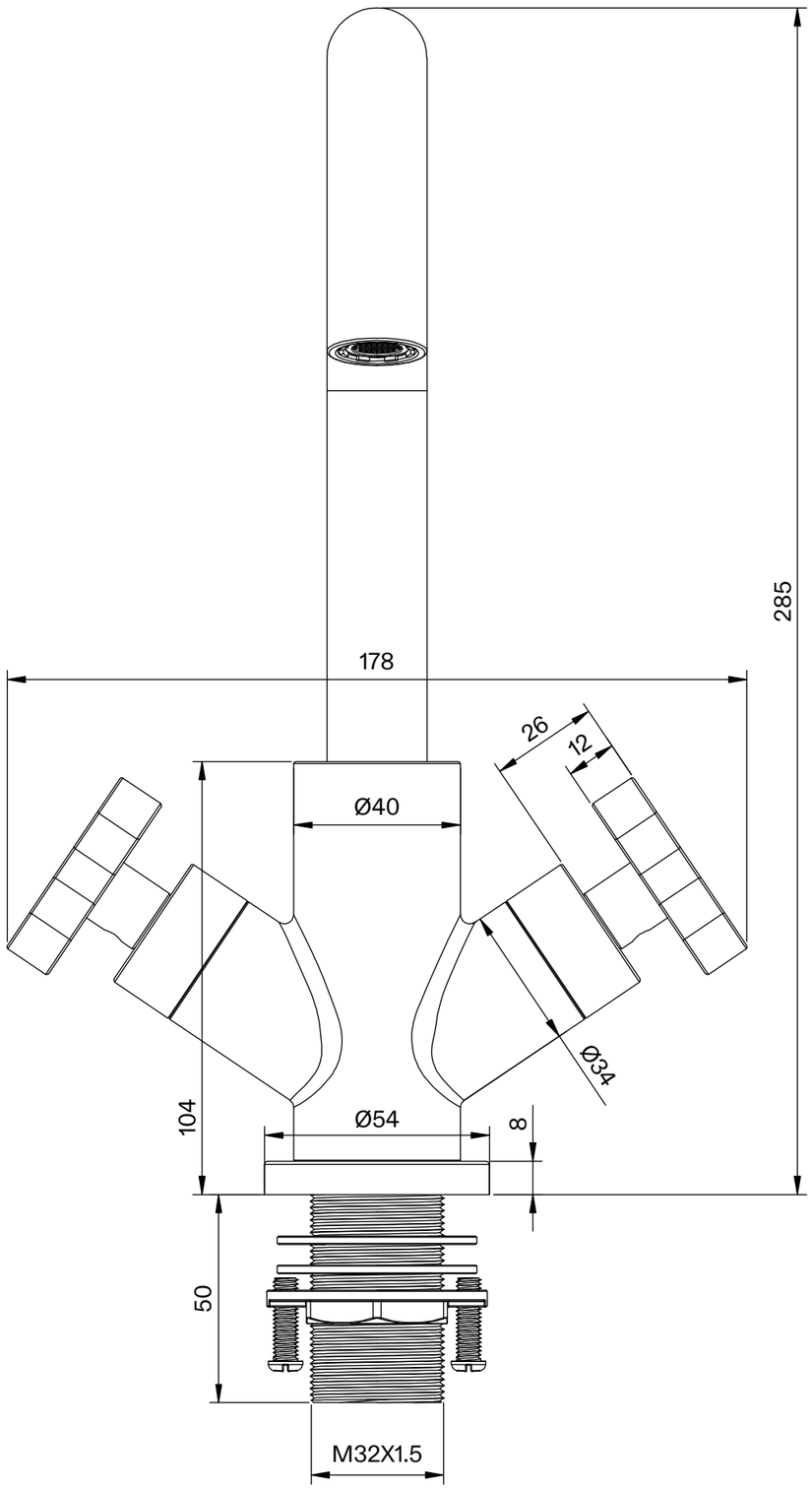

Side View

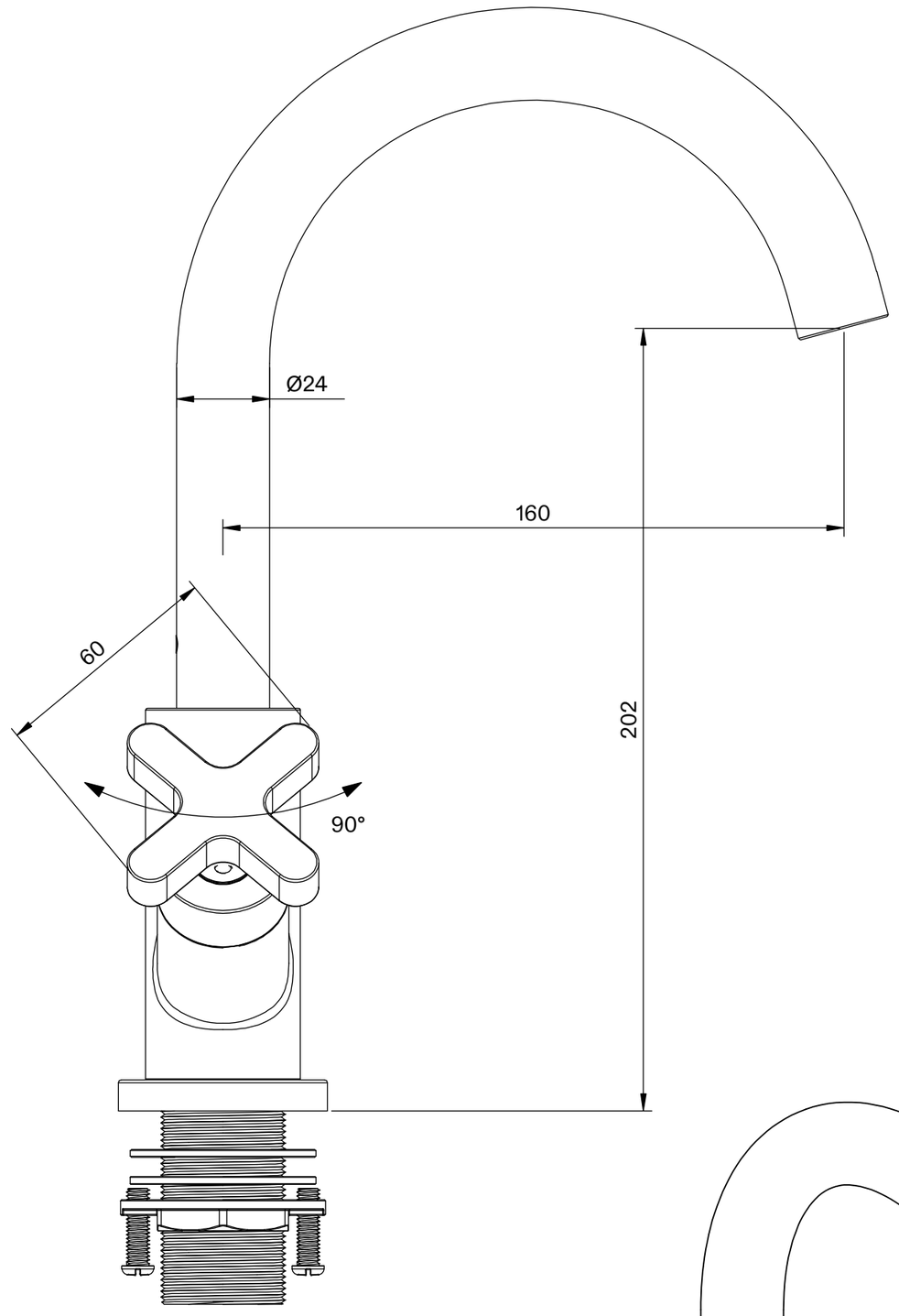

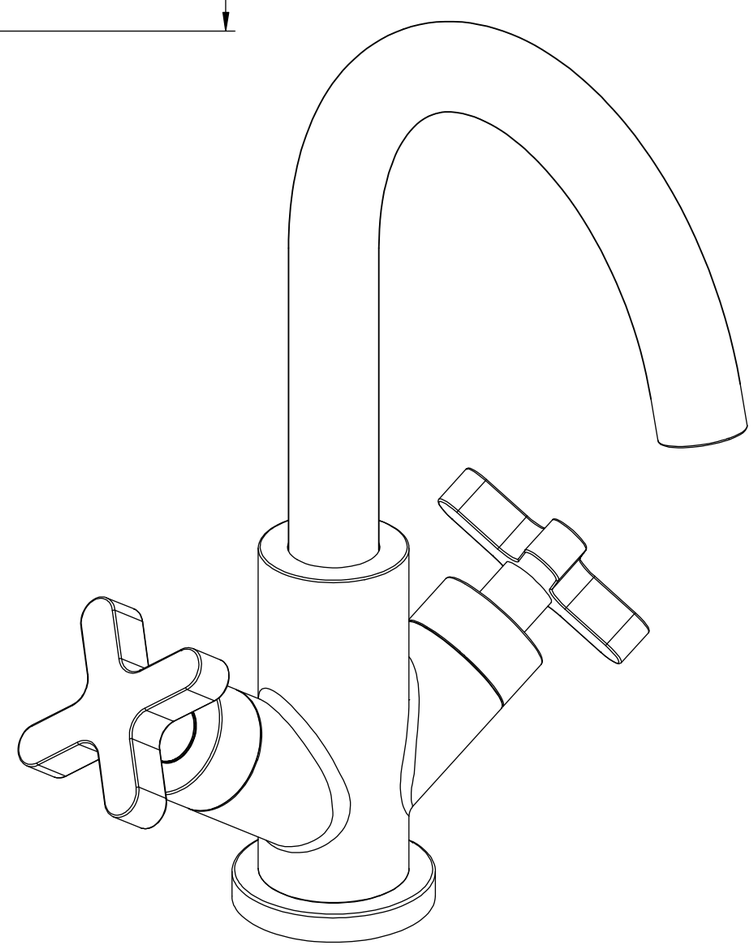

LUSSO	Product Name	Regal Crosshead Series
	Product Type	Kitchen Tap

All dimensions provided in millimeters.