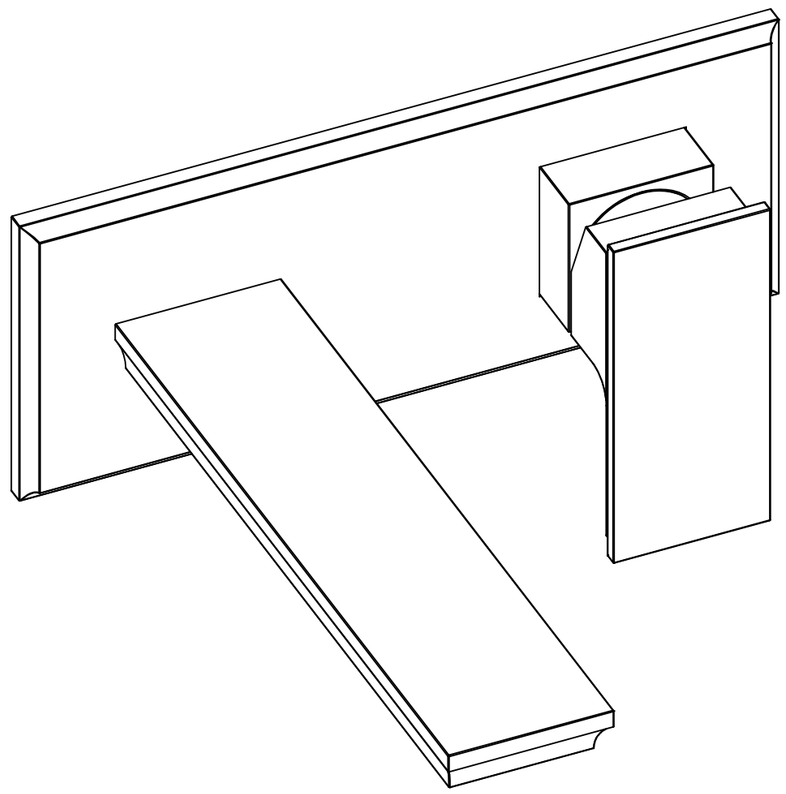

Bottom View

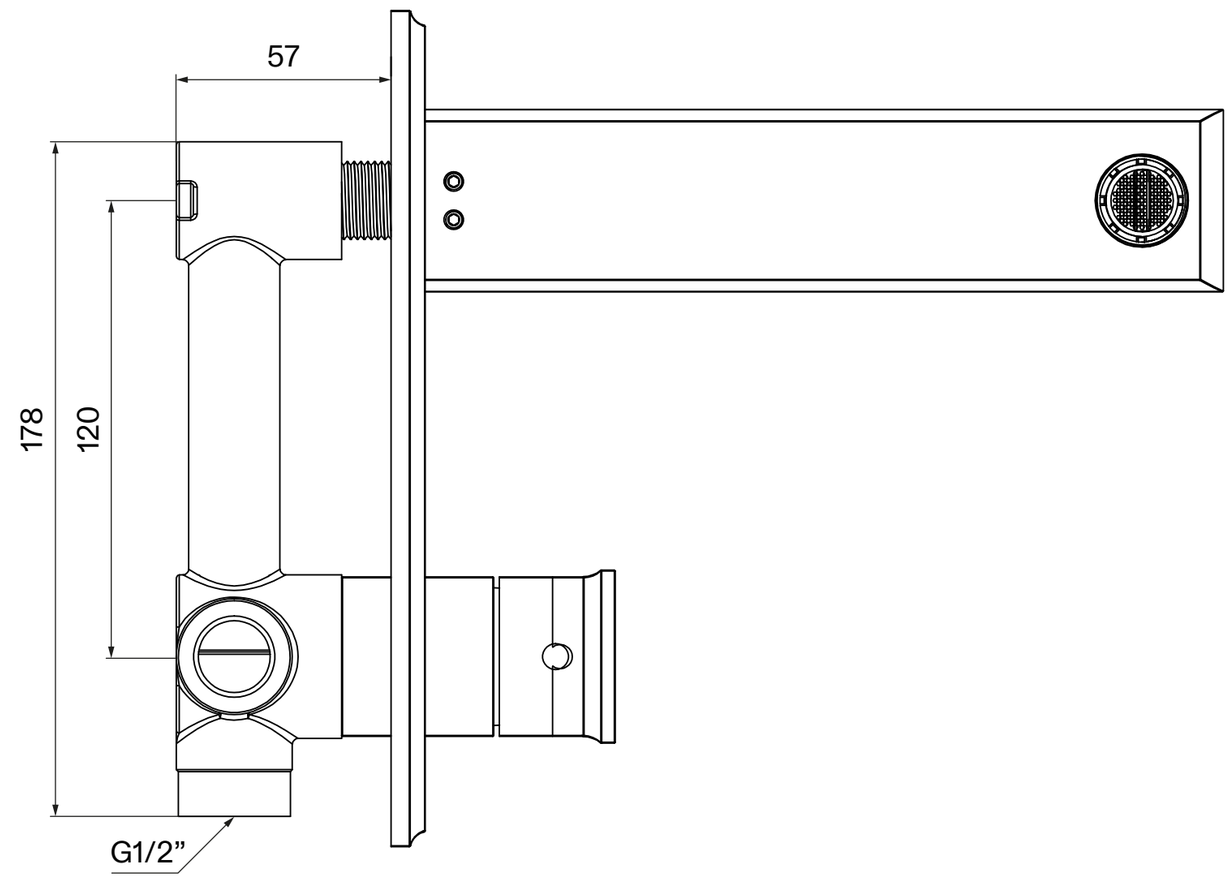

Front View

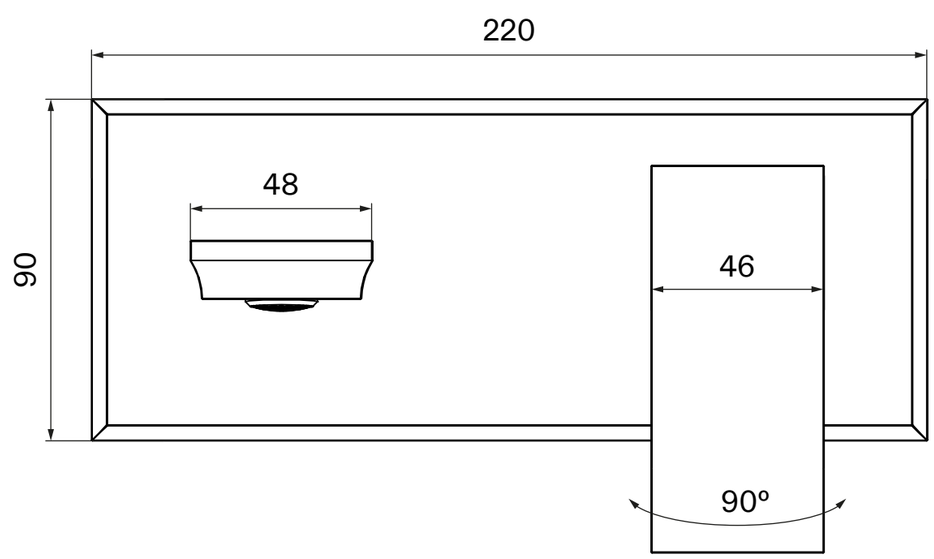

Side View

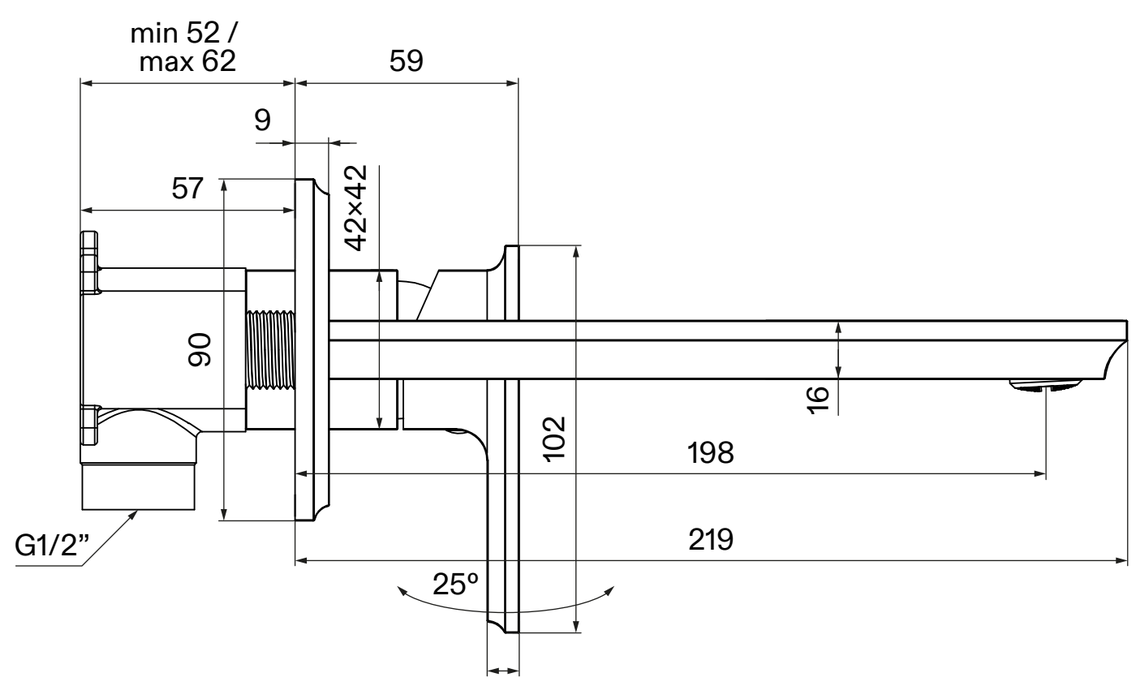

LUSSO	Product Name	Baroque Series
	Product Type	Baroque Aged Bronze Wall Mounted Basin Mixer Tap

All dimensions provided in millimeters.